EKO

ELECTRIC SCHEMATIC

Mod.

ORG. STRADIVARIUS

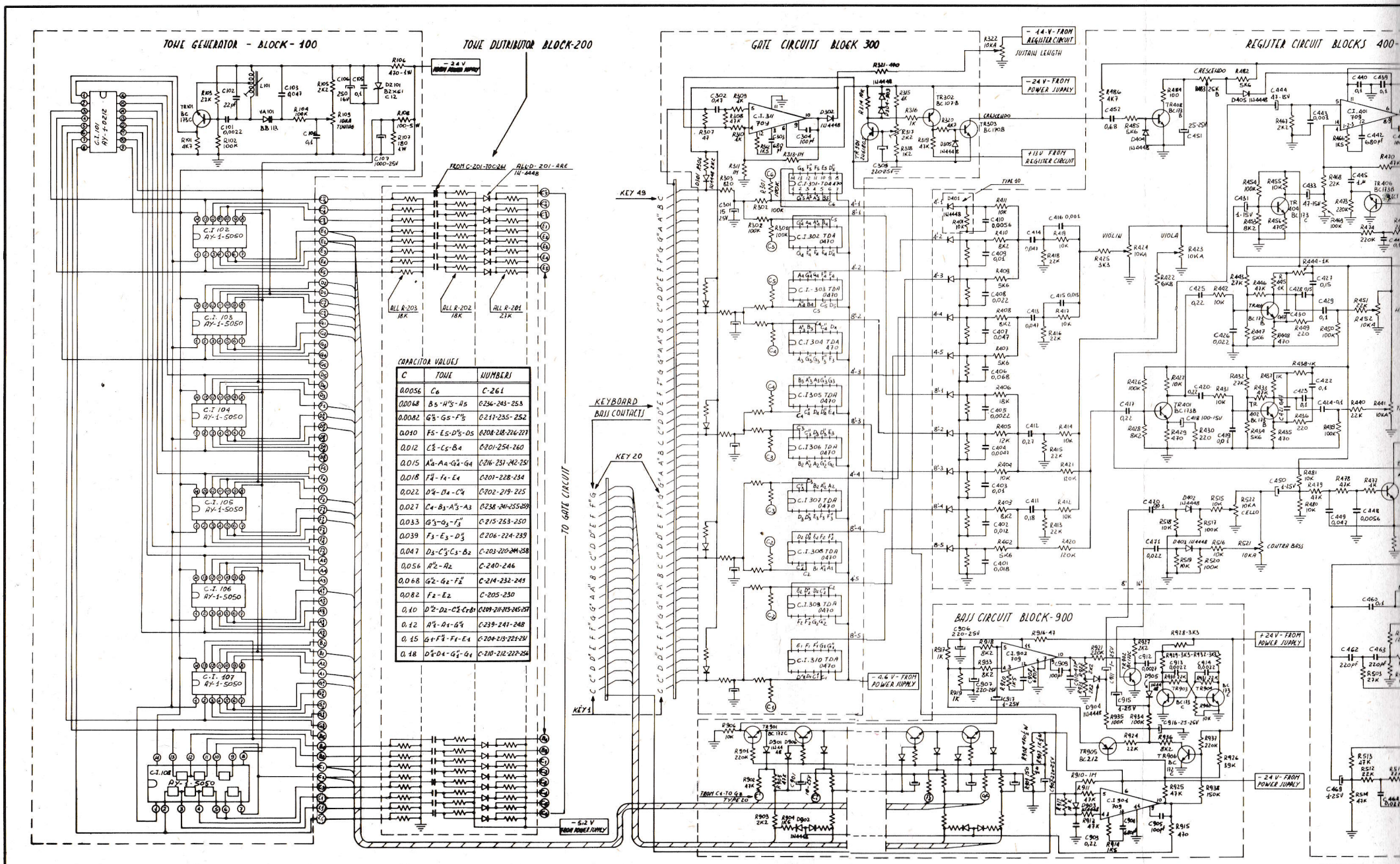
TONE GENERATOR - BLOCK - 100
TONE DISTRIBUTOR BLOCK-200
GATE CIRCUITS BLOCK 300
REGISTER CIRCUIT BLOCKS 400-
BASS CIRCUIT BLOCK-900
KEYBOARD BASS CONTACTS
KEY 49
KEY 20
KEY 1
TO GATE CIRCUIT
CAPACITOR VALUES
C | TONE | NUMBERS
0.0056 | C6 | C-261
0.0068 | B5-H#5-A5 | C-236-243-253
0.0082 | G#5-G5-F#5 | C-211-235-252
0.010 | F5-E5-D#5-D5 | C-208-218-226-227
0.012 | C#5-C5-B4 | C-201-254-260
0.015 | A#4-A4-G#4-G4 | C-216-231-242-251
0.018 | F#4-F4-E4 | C-201-228-234
0.022 | D#4-D4-C#4 | C-202-219-225
0.027 | C4-B3-A#3-A3 | C-238-241-255-259
0.033 | G#3-G3-F#3 | C-215-253-250
0.039 | F3-E3-D#3 | C-206-224-239
0.047 | D3-C#3-C3-B2 | C-203-220-241-258
0.056 | A#2-A2 | C-240-246
0.068 | G#2-G2-F#2 | C-214-232-241
0.082 | F2-E2 | C-205-230
0.10 | D#2-D2-C#2-C2-B1 | C-209-211-225-245-257
0.12 | A#1-A1-G#1 | C-239-241-248
0.15 | G1-F#1-F1-E1 | C-204-213-221-234
0.18 | D#1-D1-G#1-G1 | C-210-212-222-254
- 24 V FROM POWER SUPPLY
- 5.2 V FROM POWER SUPPLY
- 14 V FROM REGISTER CIRCUIT
SUSTAIN LENGTH
+ 15 V FROM REGISTER CIRCUIT
- 4.6 V FROM POWER SUPPLY
+ 24 V FROM POWER SUPPLY
CRESCENDO
TIME 40
VIOLIN
VIOLA
CONTRA BASS
ALL R-203 18K
ALL R-202 18K
ALL R-201 27K
ALL D-201 - ARE 1N 4448
FROM C-201-TO-C261
C.I. 101 AY-1-0212
C.I. 102 AY-1-5050
C.I. 103 AY-1-5050
C.I. 104 AY-1-5050
C.I. 105 AY-1-5050
C.I. 106 AY-1-5050
C.I. 107 AY-1-5050
C.I. 108 AY-1-5050
C.I. 301-704 AY
C.I. 302 TDA 0470
C.I. 303 TDA 0470
C.I. 304 TDA 0470
C.I. 305 TDA 0470
C.I. 306 TDA 0470
C.I. 307 TDA 0470
C.I. 308 TDA 0470
C.I. 310 TDA 0470
C.I. 902 709
C.I. 904 709
C.I. 401 709

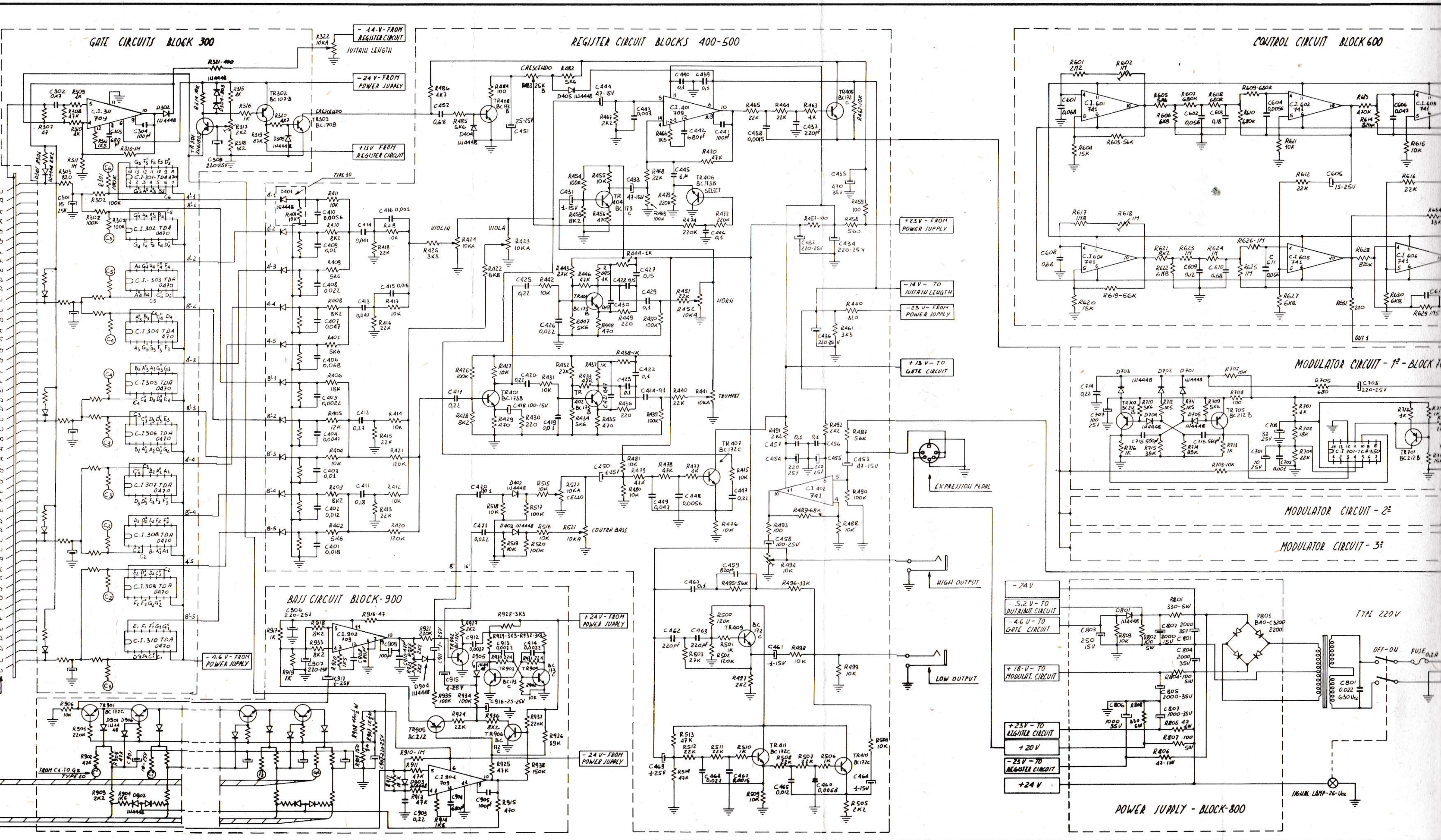
GATE CIRCUITS BLOCK 300
REGISTER CIRCUIT BLOCKS 400-500
CONTROL CIRCUIT BLOCK 600
MODULATOR CIRCUIT - 1º - BLOCK
MODULATOR CIRCUIT - 2º
MODULATOR CIRCUIT - 3º
BASS CIRCUIT BLOCK-900
POWER SUPPLY - BLOCK-800
- 14 V - FROM REGISTER CIRCUIT
SUSTAIN LENGTH
- 24 V - FROM POWER SUPPLY
+ 13 V FROM REGISTER CIRCUIT
CRESCENDO
VIOLIN
VIOLA
HORN
TRUMPET
CELLO
CONTRA BASS
+ 23 V - FROM POWER SUPPLY
- 14 V - TO SUSTAIN LENGTH
- 23 V - FROM POWER SUPPLY
+ 13 V - TO GATE CIRCUIT
EXPRESSION PEDAL
HIGH OUTPUT
LOW OUTPUT
- 4,6 V - FROM POWER SUPPLY
+ 24 V - FROM POWER SUPPLY
- 24 V - FROM POWER SUPPLY
FROM C4 TO G3 TYPE 20
- 24 V
- 5,2 V - TO DISTRIBUT. CIRCUIT
- 4,6 V - TO GATE CIRCUIT
+ 18 V - TO MODULAT. CIRCUIT
+ 23 V - TO REGISTER CIRCUIT
+ 20 V
- 23 V - TO REGISTER CIRCUIT
+ 24 V
TYPE 220 V
OFF - ON
FUSE 0,2A
SIGNAL LAMP - 26 - Vcc

CONTROL CIRCUIT BLOCK 600

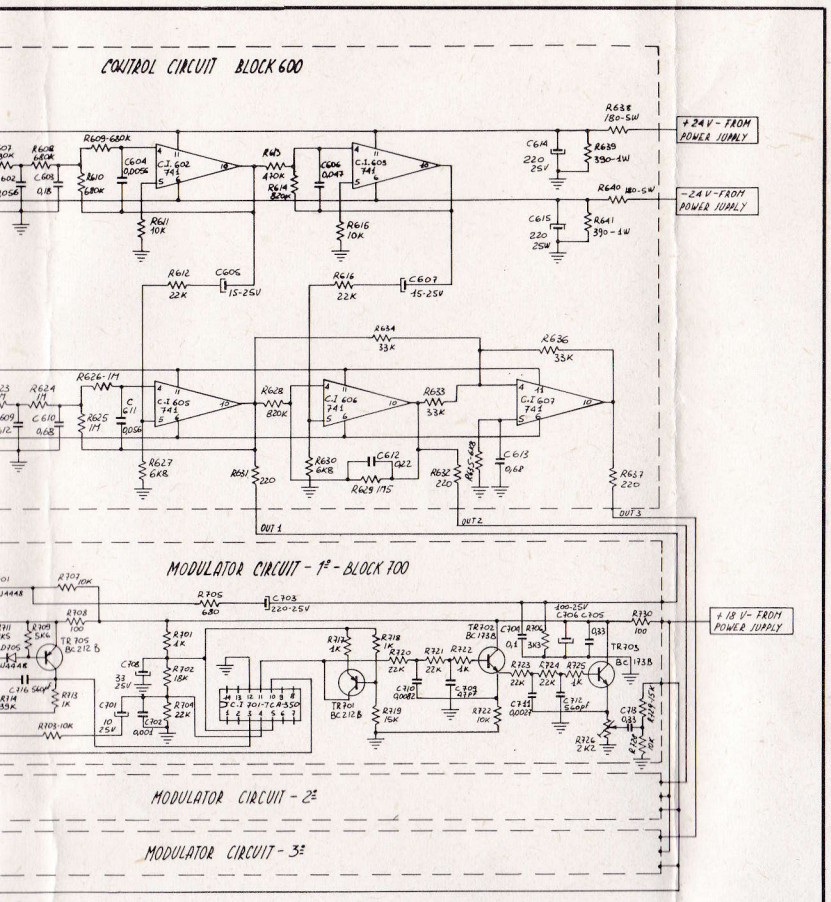

MODULATOR CIRCUIT - 1ª - BLOCK 700

MODULATOR CIRCUIT - 2ª

MODULATOR CIRCUIT - 3ª

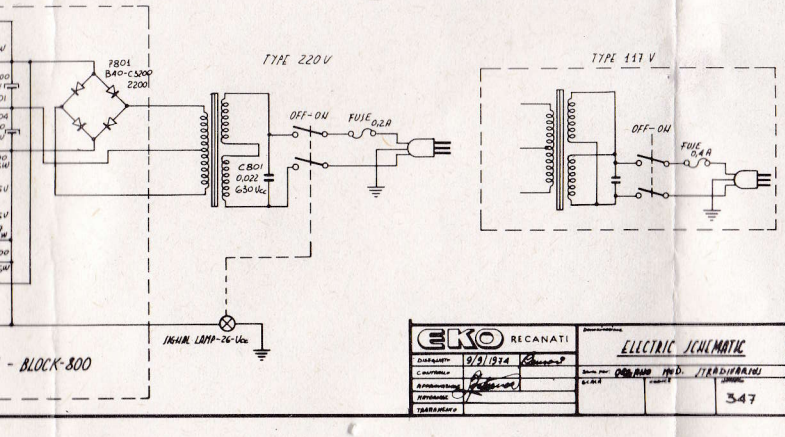

EKO RECANATI

DISEGNATO	9/9/1974	ELECTRIC SCHEMATIC
CONTROLLATO		
APPROVATO		
REVISIONE		
TRASFERIMENTO		

MOD. 1780DIVARIUS — 347

TONE GENERATOR P.C. BOARD BLOCK 100

COMPONENTS SIDE UP - P.C. BOARD N° K 527

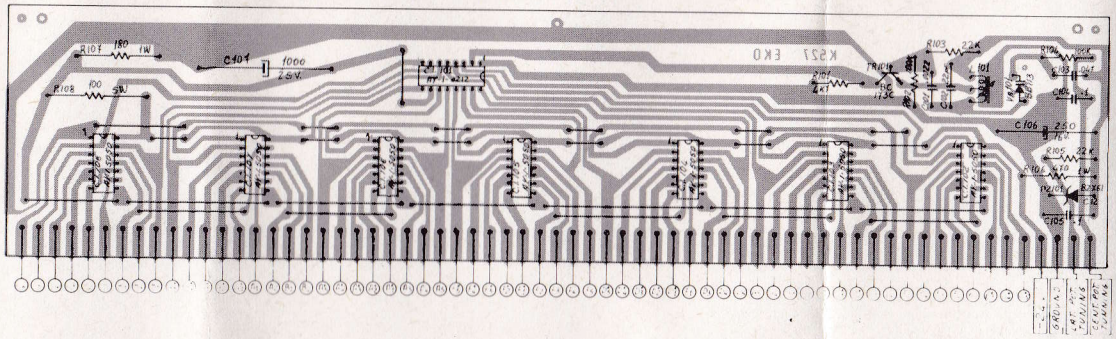

TONE DISTRIBUTOR P.C. BOARD BLOCK 200

COMPONENTS SIDE UP - P.C. BOARD N° K 528

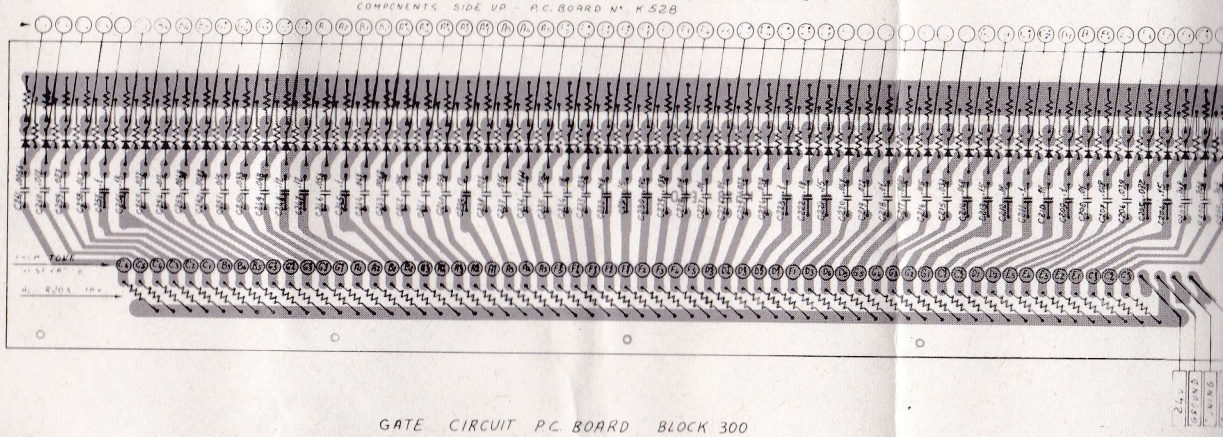

GATE CIRCUIT P.C. BOARD BLOCK 300

COMPONENT SIDE UP P.C. BOARD N° K 530

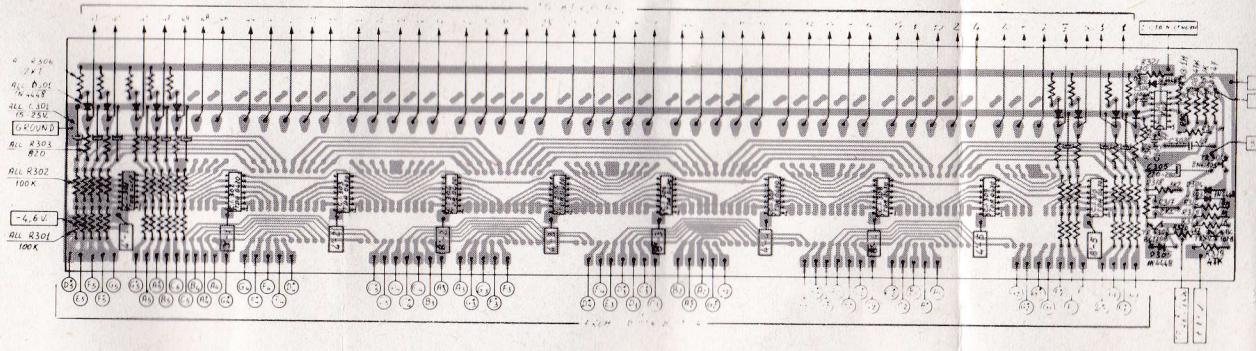

BASS CIRCUIT P.C. BOARD BLOCK 900

COMPONENTS SIDE UP - P.C. BOARD N° K 529

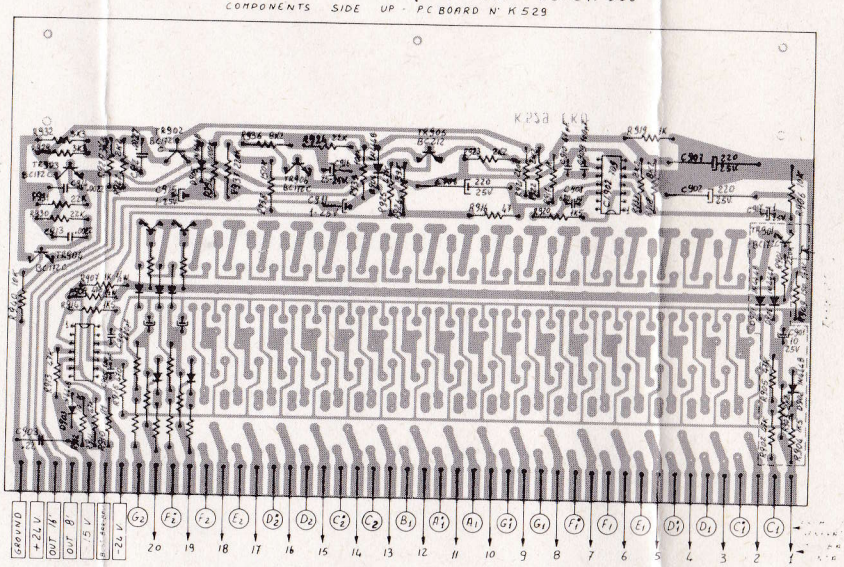

CONTROL CIRCUIT P.C. BOARD BLOCK 600

COMPONENTS SIDE UP - P.C. BOARD N° K 531

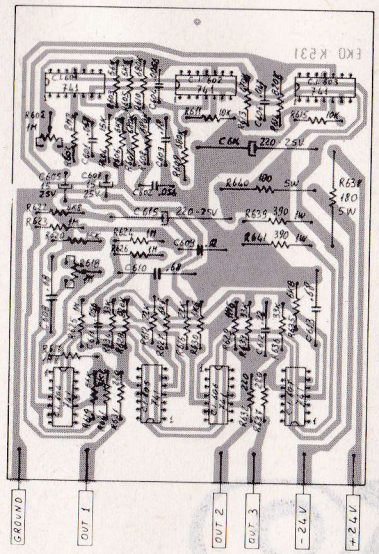

POWER SUPPY P.C. BOARD BLOCK 800

COMPONENTS SIDE UP - P.C. BOARD N° K 533

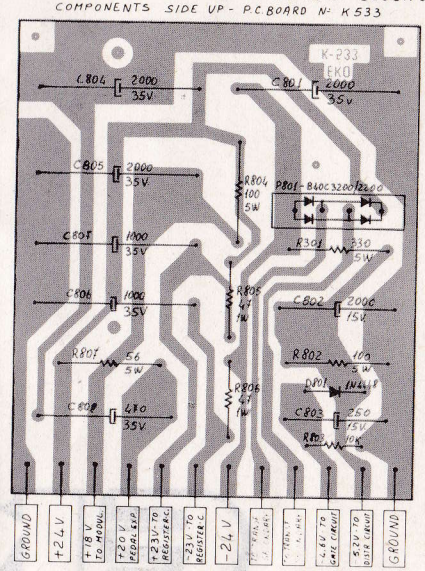

REGISTER CIRCUIT P.C. BOARD BLOCK 400-500

COMPONENT SIDE UP - P.C. BOARD N° K 535

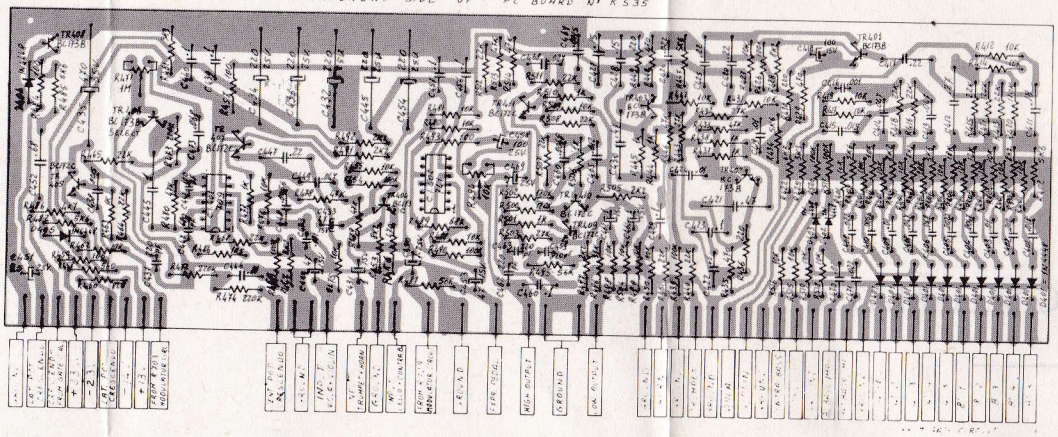

MODULATOR CIRCUIT P.C. BOARD BLOCK 700

COMPONENT SIDE UP - P.C. BOARD N° K 534 TYPE 3

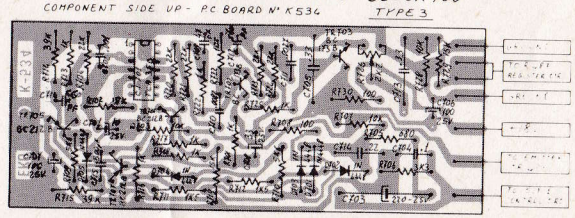

EKO RECANATI	Denominazione: PHANTOM DRAWING P.C.		
Disegnato	14-10-1974	Serve per: STRADIVARIUS	
Controllo		SCALA	CODICE
Approvazione			NUMERO 355
Materiale			
Trattamento			

MODIFICHE